

INSTRUCTION AND SAFETY MANUAL

IN-8011: XTIRPA™ 42" (1067 mm) Large Portable Manhole Guard System for PPE

XTIRPA™

TABLE OF CONTENTS

1. THE XTIRPA ™ SYSTEM 4
   1.1 About 4
   1.2 Compliance 4
      1.2.1 Configuration System 4
   1.3 Capacity, limits and design 5
   1.4 Warranty 7
2. SYMBOLS 8
3. REQUIREMENTS IN TERMS OF SAFETY 10
   3.1 Training 10
   3.2 Precautions for Use 10
   3.3 Authorized Connection 10
      3.3.1 ANSI Z359.18 2017 Type D and CSA Z259.15 2022 Type AD 10
      3.3.2 AS/NZS 5532 2013 - Free Fall Arrest System 11
   3.4 Lifting Materials 11
   3.5 Collective fall protection 11
4. INSTALLATION 12
   4.1 Installation instructions for the IN-2324 portable guardrail 12
      4.1.1 IN-2324 Fully enclosed portable guardrail 12
      4.1.2 IN-2324 Partially enclosed portable guardrail (position v) 14
      4.1.3 IN-2324 Portable guardrail for large areas 16
   4.2 Installation of the temporary anchoring system Davit arm 18
   4.3 Installation of anti-tilt device (A2108-18 or A2108-20) 20
   4.4 The installation of a self-retracting device will be done on anchorage points. 22
5. OPERATION 25
   5.1 Anchor points 25
   5.2 Multi-Users 26
   5.3 Acceptable work angle 26
   5.4 Acceptable work angle without risk of falling / recovery angle 27
6. INSPECTION, MAINTENANCE, AND STORAGE 28
   6.1 Inspection 28
   6.2 Maintenance 28
   6.3 Storage 28
7. COMPONENTS 29
   7.1 Temporary anchoring systems 29
8. APPENDIX 30
   8.1 Labels 30
   8.2 Calculation for ground clearance 31
   8.3 Maintenance and Inspection Sheet 32
   8.4 Registration form 33

1. THE XTIRPA ™ SYSTEM

1.1 About

The XTIRPA™ system is an Anchorage connector that forms part of a system of personal protective equipment for fall prevention, rescue, work positioning, rope access and confined space access.

⚠ WARNING

Innova Public Utility Products, Inc., the manufacturer disclaims all warranties and liability in the event of unauthorized modification, improper use, poor maintenance, or replacement of any part of the equipment with non-original parts. These actions can result in serious injury or death.

No modifications or additions to the equipment may be made without the prior written consent of the manufacturer, Innova Public Utility Products, Inc., All repairs must be carried out in accordance with the manufacturer's operating procedures Innova Public Utility Products, Inc.

This manual, together with technical drawings and installation instructions, is supplied with the purchase of the XTIRPA™ system. The user shall make sure these drawings and instructions are included and shall endeavor to keep all these elements for the entire life span of the equipment.

If the product is resold outside the first country of destination, it is essential for the safety of the user that the reseller supply the instructions for use, maintenance and periodic inspection in the language of the country where the product is to be used.

Please comply with all labor and safety regulations applicable in the country or province where you will be using this anchorage connector.

For any question related to the use, maintenance, or installation of the XTIRPA™ systems, please contact the manufacturer, Innova Public Utility Products, Inc., via the contact form on our website: http://www.xtirpa.com.

Ensure that the following additional information is also provided by the manufacturer or authorized distributors:

- Technical drawings
- Installation instructions

1.2 Compliance

Manufacturer:

Innova Public Utility Products, Inc.
1040 boulevard Industriel,
Granby, Québec, Canada J2J 1A4

1.2.1 Configuration System

The scope of the manufacturer's approval covers all components and parts listed in this manual. The scope of the manufacturer's approval does not extend to the anchor and substrate to which the anchorage connector is attached. The manufacturer certifies that the XTIRPA™ system anchor connector meets the requirements listed in section "1.3 Capacity, limits and design" on page 5.

The manufacturer certifies that this anchorage connector has been tested in accordance with the requirements of the following standards:

- ANSI A359.7 2019
- CSA Z259.12 2016

Compliance tests have been carried out by the following laboratory:

Innova Public Utility Products, Inc.,
1040 boulevard Industriel,
Granby, Québec, Canada J2J 1A4

This laboratory has been assessed by the following institution:

Bureau de normalisation du Québec (BNQ), in accordance with ISO/IEC 17025:2005 standard requirements. Accredited laboratory number: 821.

1.3 Capacity, limits and design

All XTIRPA™ systems are designed to operate for 10 years provided they are used, maintained, inspected, and stored in accordance with this manual. The XTIRPA™ system is one of the lightest and most ergonomic Anchorage connector on the market. The Davit arms, masts, and barricades are made of 6061-T6 aluminum. Some larger Davit arm are made from HSS A-500 steel. Adapters are manufactured in SS 304, SS 316, 44 W galvanized steel, or 50 W galvanized steel. Pulleys are made of acetal.

Technical Specifications of this Product

Manufacturer	Innova Public Utility Products, Inc.
Brand	XTIRPA™

Model	IN-8011	
Name	XTIRPA™ 42" (1067 mm) Large Portable Manhole Guard System for PPE	
Standards	ANSI Z359.1 2007 CSA Z259.2.1 1998 (R2011) OSHA 1910.66	
Equipment's maximum arrest force	8 kN\user	
Davit arm – Part N° IN-2210	Length	Min.: 12” (305 mm) Max.: 18” (457 mm)
	Height	Min.: 79” (2006 mm) Max.: 95” (2419 mm)
Minimum breaking strength for anchorage	N° 1: 4,310 lbf (19.2 kN) N° 2: 4,310 lbf (19.2 kN) N° 3: 5,000 lbf (22.2 kN) N° 4: 2,200 lbf (9.8 kN)	
Operating temperature	Max.: 130 °F (54 °C) Min.: -10 °F (-25 °C)	
Elastic deformation	Not applicable	
Max. work load/anchorage	420 lb (191 kg)	
System	Adapter Mobile	
Maximum design moment	76,500 lbf•in (8,542 kN•m)	
Simultaneous users (max.)	1	
Weight	A2108-18: 3.5 lb (1.7 kg) A2108-20: 13 lb (5.9 kg) IN-2324 82 lb (37 kg) IN-2210: 66 lb (30 kg)	

The anchorage connector must not be used beyond its limitations or for any purpose other than those for which it was originally intended, namely stopping a fall. The anchorage connector must only be used as personal protective equipment to prevent falls.

⚠ WARNING

This system was not designed to work with more simultaneous users than intended. A user is defined as a person who is physically connected to an anchorage connector.

⚠ WARNING

This system cannot be used simultaneously to transport equipment when users are physically connected to an anchorage connector.

1.4 Warranty

The XTIRPA™ system offered by the manufacturer, Innova Public Utility Products, Inc., is warranted against manufacturing defects and material failure for a period of two (2) years from the date of shipment, and this warranty applies only to the original purchaser of the XTIRPA™ system. The manufacturer will promptly repair and replace any components or parts found to be defective. The manufacturer reserves the right to elect to return any allegedly defective part to its factory for inspection prior to making any repair or replacement.

Only those components or parts deemed defective by the manufacturer, at its sole discretion and following any inspection required and carried out by the manufacturer, will be repaired or replaced by the manufacturer.

All claims must be communicated in writing to the manufacturer, immediately after discovery of the defect by the owner, and must be accompanied by a copy of the original purchaser's proof of purchase. The manufacturer will issue a claim number and give precise instructions that must be followed to make a claim and return the defective parts. The owner will cooperate with the manufacturer and its representatives to allow inspection of any allegedly defective parts. All shipping costs to return defective parts and components to the manufacturer's factory will be paid by the owner. The cost of returning replacement parts or components is paid by the manufacturer.

The warranty does not cover damage to the equipment resulting from any cause other than a defect in material or workmanship, including, but not limited to, any damage resulting from abuse, lack of maintenance, improper handling or storage, willful damage, vandalism, accidental damage or damage resulting from impact or collision, damage that may result from transportation, damage caused by fire, explosion, chemical, toxic or corrosive vapors, substances or environments, water, normal corrosion or rust, storms, hail and other acts of nature, war or insurrection, acts of terrorism or other damage beyond the manufacturer's control. This warranty, which applies only to the original customer, is the only warranty that applies to the XTIRPA™ system and is in lieu of all other warranties, express or implied. Without limiting the generality of the foregoing, the manufacturer shall not be liable for any costs, damages or claims, including special, incidental or consequential damages such as, but not limited to, damages related to lost profits or revenue, business interruption, physical injury due to failure to follow instructions, or any other damages of good faith or reasonable care due to negligence, and any pecuniary or other loss, arising out of or in connection with the use or inability to use the XTIRPA™ system, even in the event of default, tort (including negligence), strict liability, breach of contract or breach of warranty, and even if the manufacturer has been advised of the possibility of such damages. The manufacturer hereby disclaims all warranties and conditions, express, implied or statutory, including, but not limited to, all implied warranties or conditions of merchantability, compliance with a particular purpose and freedom from negligence or workmanship issue.

The user must complete and return the limited warranty registration form for each product. Make sure that the XTIRPA™ system's purchase date from the manufacturer or authorized service center is indicated.

2. SYMBOLS

⚠ WARNING

Indicates a dangerous situation which, if not avoided, could lead to death or serious injury.

⚠ CAUTION

Indicates a hazardous situation which, if not avoided, could result in minor or moderate injury.

Indicates a safe working condition.



Please read and understand the manual before using this system.



An authorized anchorage point on the system indicating the maximum number of simultaneous users wearing their Full-body harness. The system can also be used to lift and lower users.



The system can be used to lift and lower users.



The system cannot be used to lift or lower users.



The system equipment must be installed by a qualified person in accordance with the manufacturer's instructions.



Please perform a visual inspection before any use, in accordance with the Manual's instructions. Please do not use the system in case of doubt regarding its safe use.



Maximum working moment (MWM).

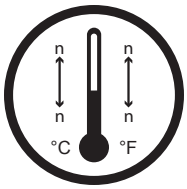

Minimum and maximum operating temperature.



Maximum workload.

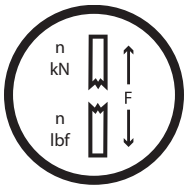

Minimum breaking strength (MBS).



Bolt tightening required



Maximum arrest force (MAF)



The pin must be fitted before use.



Minimum breaking strength (MBS) of 5,000 lbf (22.2 kN).

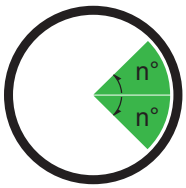

Operating angle.



It is forbidden to install more than one (1) user on the same anchorage point.

3. REQUIREMENTS IN TERMS OF SAFETY

3.1 Training

To work safely, every operator must be trained and competent. You can contact the manufacturer, Innova Public Utility Products, Inc., or an authorized service center to arrange a training program.

Users must have read and understood this manual. They must be in good physical health and medically fit, not be afraid of heights, and not be under the influence of drugs or alcohol, so as not to affect their safety during normal use of the equipment or in the event of an emergency.

⚠ CAUTION

Users of this system must understand the instructions, capability, maintenance, and consequences of system malfunction and be properly trained before using the system in accordance with OSHA 29 CFR 1910.66 and 1926.503 or applicable local standards.

3.2 Precautions for Use

Before use, a rescue plan must be put in place to deal with any emergencies that may arise during work. Of course, before and during use, it is essential to ensure that any such rescue is carried out safely and effectively. It is therefore important to always work in teams of at least two (2) people when using this anchorage connector. One of the two (2) users can call emergency services in the event of a

fall. Each user must be equipped with a fall arrest Full body harness. This is the only body-gripping device permitted for use in a Fall arrest system (FAS), combined with a means of limiting the Maximum dynamic forces exerted on it when arresting a fall. Refer to Table "1.3 Capacity, limits and design" on page 5 for maximum stopping force.

It is also advisable to wear additional safety equipment appropriate for the job, such as, but not limited to, a hard hat, protective goggles, leather gloves, protective clothing, work boots and, if necessary, torches and respiratory protection.

⚠ WARNING

Before each use, for safety reasons, it is essential to check the space required for the user in the work area. This prevents any collision with the ground or any other obstacle in the path of the fall.

To ensure that the device is usable and functions correctly, the operator should check the following before each use:

- The system shows no signs of excessive wear, cracks or corrosion.
- The A2002-22N anchor plates and anchor points do not show any deformation.
- The connecting pins are present and properly installed.
- The nuts and bolts are properly tightened.
- Labels are present and clearly legible.
- The system has been tested and the date of the last or next inspection is shown.

⚠ WARNING

If the system has stopped a fall or has been damaged, it will then have to be immediately removed from service. Clearly indicate that the fall arrest system is ‘UNUSABLE’. It must then be inspected and serviced in accordance with section "6. INSPECTION, MAINTENANCE, AND STORAGE" on page 28. It may only be put back into service if a Qualified person, an approved service center or the manufacturer authorizes its reuse in writing.

3.3 Authorized Connection

3.3.1 ANSI Z359.18 2017 Type D and CSA Z259.15 2022 Type AD

The Fall-protection system (FPS) can be used with connectors, lanyards, and Full body harnesses. Connectors, such as D-rings and carabiners must comply with ANSI Z359.12 or CSA Z259.12 standards. They must be capable of withstanding a minimum force of 5,000 lbf (22 kN). Connector gates must be able to withstand a minimum force of 3,600 lbf (16 kN). The connector material must be compatible in terms of size and shape so as not to unintentionally cause the opening of gate

mechanisms. Check the compatibility of the connecting carabiner to the D-ring of a full body harness or to the anchorage connectors.

Lanyards must comply with ANSI Z359.3 or CSA Z259.5 standards. Do not tie knots on a lanyard. Do not bend the lanyard back on itself. Full-body harnesses must comply with ANSI Z359.11 or CSA Z259.10 standards.

Ensure that all equipment used in conjunction with the XTIRPA™ system, such as connectors, lanyard or Full body harnesses, are in good working condition. Do not use if the following defects are observed: fraying, crushing, severing, unwinding, twisting, knotting, binding, loose or torn stitches, broken or pulled cables or multiple broken strands, excessive elongation, chemical attack, dirt, abrasion, alteration, and wear.

⚠ WARNING

Do not rely on touch or sound to make sure that the connecting components are working properly. Visually check that the gates are closed before any use.

3.3.2 AS/NZS 5532 2013 - Free Fall Arrest System

Equipment used in conjunction with AS/NZS 5532-2013 Standard - Free Fall Arrest Systems should comply with AS/NZS 1891 and AS/NZS 4488 series standards.

3.4 Lifting Materials

The Anchorage connector should only be used as personal protective equipment (PPE) against falls and not as lifting equipment. The product must not be used simultaneously for lifting equipment (material) and as PPE (personal protective equipment). In some countries/provinces, it is not permitted to use personal protective equipment (PPE) when lifting equipment. If this is the case, the product must be dedicated to lifting equipment (material) and can no longer be used as personal protective equipment (PPE). Never exceed 722 lbs (328 kg) when lifting equipment (materials).

3.5 Collective fall protection

Personal protective equipment (PPE) to protect against falls is essential to ensure worker safety, but it alone does not guarantee complete protection for everyone near the area where there is a risk of falling. Protective equipment therefore plays an equally crucial role in preventing accidents in the workplace.

Protective equipment, such as guardrails, safety nets, railings, etc., is designed to protect all workers on a site, including those who are not directly exposed to the risk of falling.

When used together, these protection strategies create a collective and structured approach that significantly improves worker safety and complies with occupational health and safety standards. For optimal safety, it is essential to assess and implement the protective measures available before using PPE.

4. INSTALLATION

Before use, contact the manufacturer, Innova Public Utility Products, Inc., or authorized distributors to determine the optimal installation process and configuration for your application. Follow all appropriate technical installation and fastening instructions provided by the manufacturer, Innova Public Utility Products, Inc.

In certain applications, the commissioning of the XTIRPA™ system may require additional precautions to:

- Limit the risk of falling during installation by installing an additional anchorage connector.
- Limit the possibility of damage to the system, such as use under excessive heat or humidity, in a corrosive or chemical environment, near a high tension power line, in a toxic or explosive atmosphere (non-exhaustive list).
- Avoid any injury to the user by limiting the use when there is a risk of falling objects and by taking all the necessary precautions regarding the tilting effects in the event of a fall.

⚠ WARNING

To ensure safety, the anchorage connector must always be placed correctly, and the work must be performed in a way that reduces the risk of falls as well as the height of falls. To ensure optimal use, it is preferable that the anchorage connector be placed above the user's position.

⚠ WARNING

We advise users to avoid environmental hazards. Frequent inspections are required during the presence of environmental risks. Please refer to section "5. OPERATION" on page 25on page 25 to learn more.

4.1 Installation instructions for the IN-2324 portable guardrail

The IN-2324 portable guardrail is a component of the IN-8002 system and is classified as personal protective equipment (PPE) rather than a protective measure It is not recognized as a guardrail according to regulatory standards, as it does not meet the horizontal load resistance requirements imposed on fixed or temporary guardrails. However, it is a valuable visual indicator, helping to prevent accidental access to hazardous areas. Its lightweight and portable design allows for quick installation and easy repositioning within the IN-8002 system, making it particularly suitable for dynamic or temporary work environments. The instructions below describe the proper method for installing the IN-2324 to ensure safe and effective use.

There are two methods for installing the IN-2324, depending on the size of the opening:

- Portable guardrail IN-2324 fully closed – Recommended for openings not exceeding 36 inches (0.9 meter) in any direction.
- Portable guardrail IN-2324 partially closed (Position V) – Recommended for openings greater than 36 inches (0.9 meter), when full closure is not possible.

4.1.1 IN-2324 Fully enclosed portable guardrail

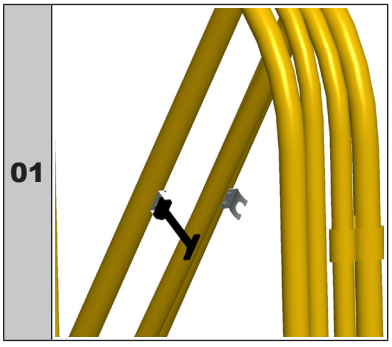

Remove the rubber lock.

02

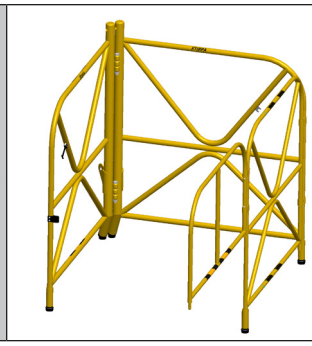

Open the IN-2324 portable guardrail to its maximum capacity.

03

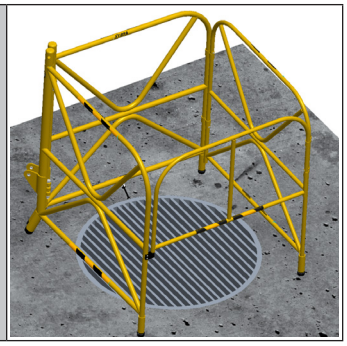

Position the IN-2324 portable guardrail around the work area.

04

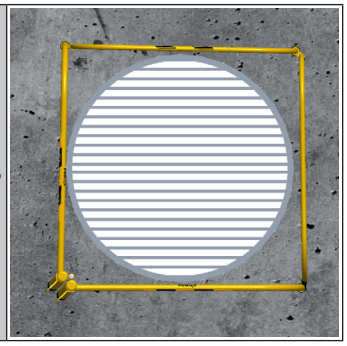

Ensure that the work area is centered within the perimeter of the IN-2324 portable guardrail.

05

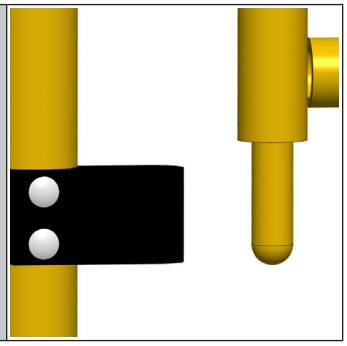

Close and lock the gate of the IN-2324 portable guardrail using the locking mechanism.

06

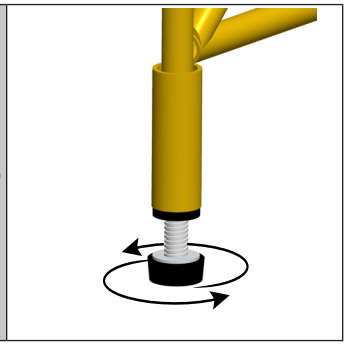

Level the IN-2324 portable guardrail by adjusting the leveling feet.

07

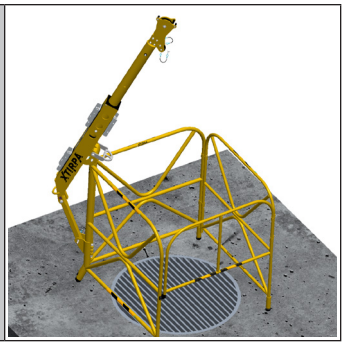

See section "4.2 Installation of the temporary anchoring system Davit arm" on page 18.

08

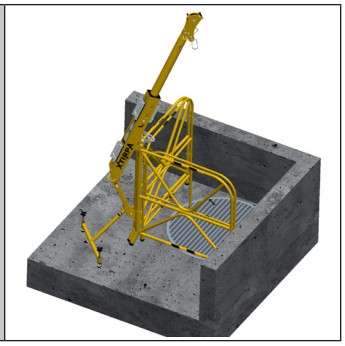

The A2108-18 or A2108-20 can be installed on the IN-2324 portable guardrail to improve its stability. Please refer to the section "4.3 Installation of anti-tilt device (A2108-18 or A2108-20)" on page 20 for instructions on when and how to install this system.

09

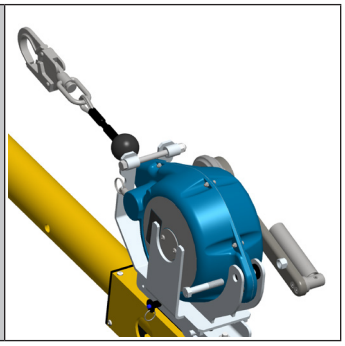

Please refer to the section "4.4 The installation of a self-retracting device will be done on anchorage points." on page 22 for instructions on when and how to install this system.

4.1.2 IN-2324 Partially enclosed portable guardrail (position v)

01

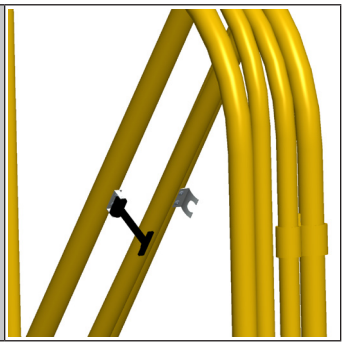

Remove the rubber Lock.

02

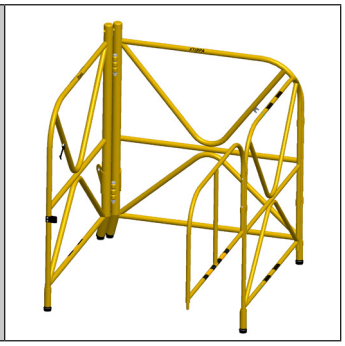

Open the IN-2324 portable guardrail to its maximum capacity.

03

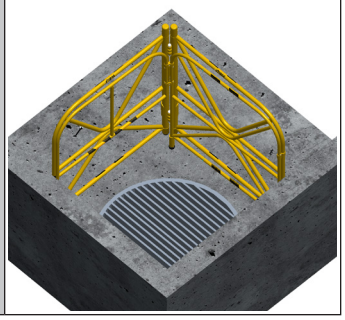

Position the IN-2324 portable guardrail around the work area. Fold the two sections of the IN-2324 portable guardrail together, one inside the other.

04

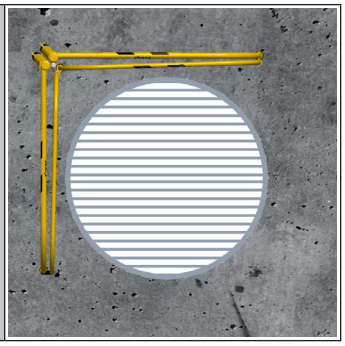

Ensure that the work area is centered within the perimeter of the IN-2324 portable guardrail.

05

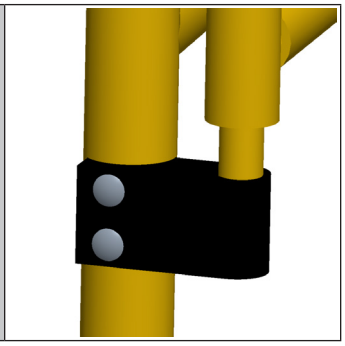

Close and lock the gate of the IN-2324 portable guardrail using the locking mechanism.

06

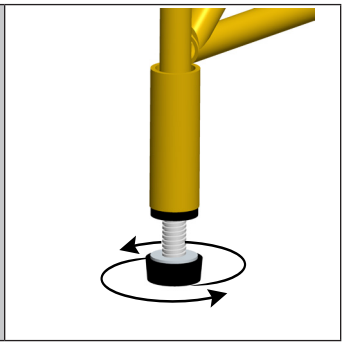

Level the guardrail by adjusting the leveling feet.

07

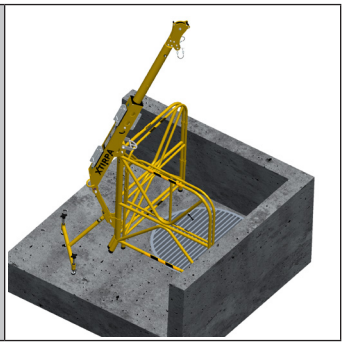

See section "4.2 Installation of the temporary anchoring system Davit arm" on page 18.

08

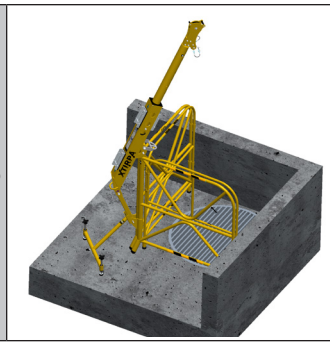

The A2108-18 or A2108-20 can be installed on the IN-2324 portable guardrail to improve its stability. Please refer to the section "4.3 Installation of anti-tilt device (A2108-18 or A2108-20)" on page 20 for instructions on when and how to install this system.

09

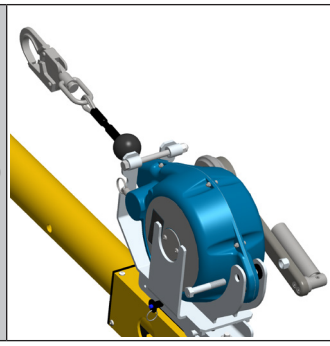

Please refer to the section "4.4 The installation of a self-retracting device will be done on anchorage points." on page 22 for instructions on when and how to install this system.

4.1.3 IN-2324 Portable guardrail for large areas

Installing the IN-2324 portable guardrail in a V-shape may require the addition of permanent fixed guardrails when used near large openings in a designated fall hazard area.

In this configuration, the IN-2324 portable guardrail is generally positioned behind the permanent fixed guardrails.

According to local safety standards, these fixed guardrails must be installed as close as possible to the locally designated fall hazard area.

In addition, local standards may allow temporary railings to be installed on the remaining sections of the large opening, provided that the IN-2324 portable guardrail is not positioned in front of them and that the Barricades are installed at a minimum safe distance from the edge of the fall hazard area.

Please refer to "5.3 Acceptable work angle" on page 26 of this manual for detailed installation instructions.

The figure on the following page shows a typical installation for a large opening, using the IN-2324 portable guardrail in a V-shape, a permanent fixed guardrail (XTIRPA™ product: IN-6008), a temporary barricade (XTIRPA™ product: IN-2101), the complete IN-8002 system, and other support equipment.

Side view

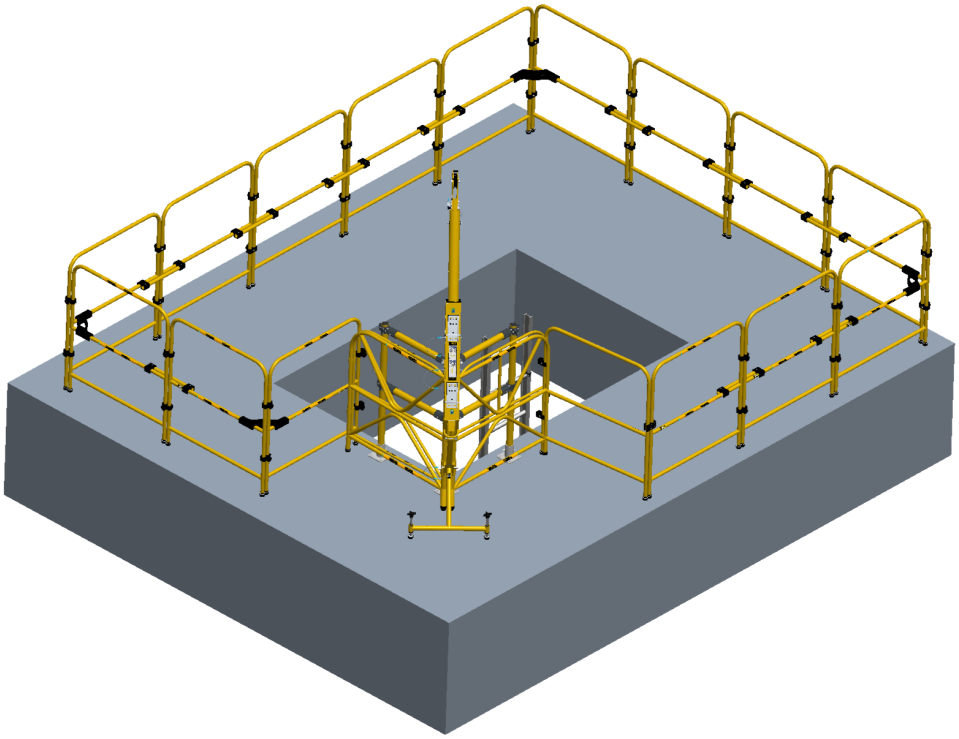

Plan view

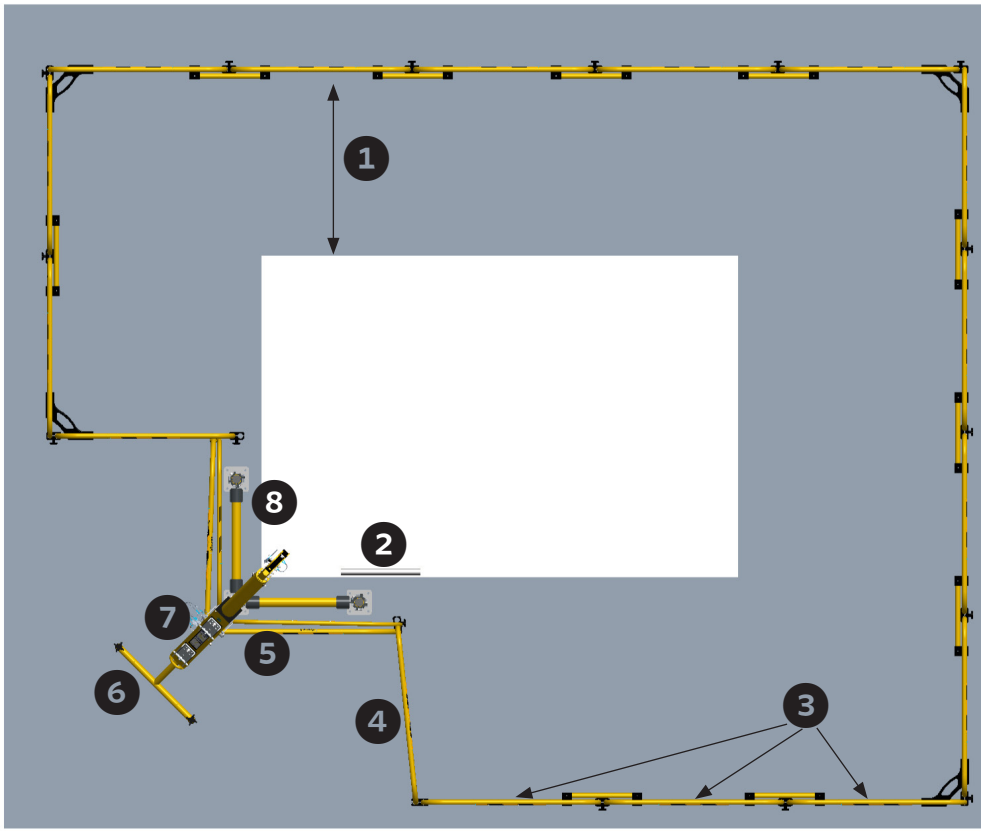

1. Minimum safety distance according to local regulations.
2. Ladder (support equipment).
3. Temporary barricade (XTIRPA™ product: IN-2101).
4. Access gate
5. IN-2108 / IN-2324
6. A2108-18
7. IN-2210
8. Fixed guardrail (XTIRPA™ product: IN-6008).

4.2 Installation of the temporary anchoring system Davit arm

The system must be installed on a stable and level surface and must not be installed on uneven surfaces, including but not limited to sand, grass, gravel, and rocks. The installer must also ensure that the receiving surface can withstand the strength applied in the direction of the load in case of a fall. Please refer to the maximum resistance in the design (vertical) in section "1.3 Capacity, limits and design" on page 5.

01

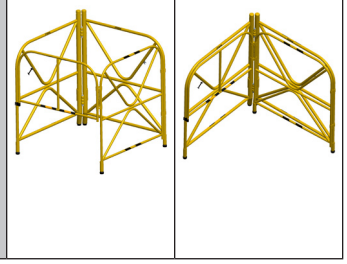

Complete the installation of the IN-2324 portable guardrail in accordance with the previous sections of the manual.

02

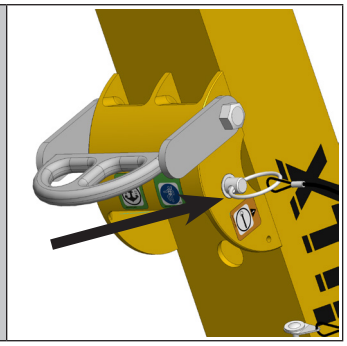

Remove the pin from its slot in the Davit arm.

03

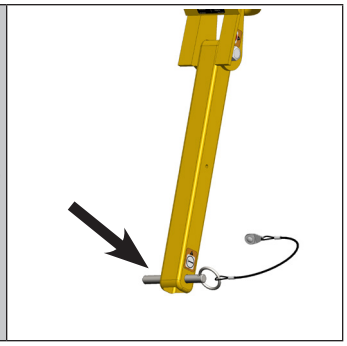

Remove the pin from the link from its location.

04

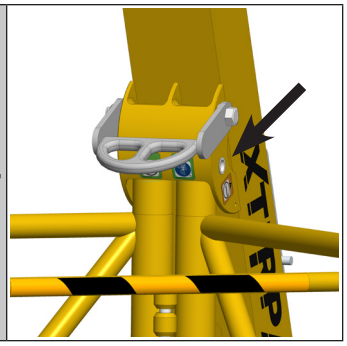

Install the Davit arm receptacle on the mast integrated into the IN-2324 portable guardrail.

05

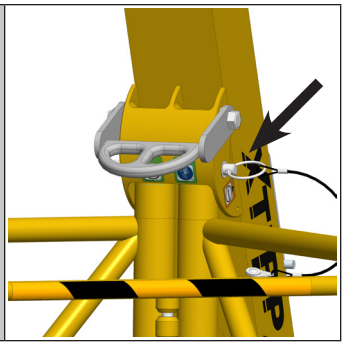

Insert the locking pin to secure the system.

06

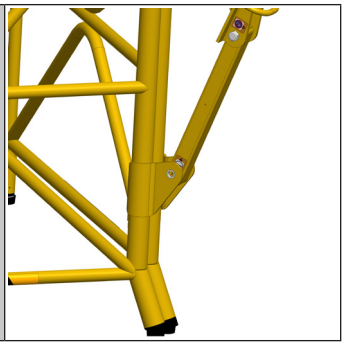

Install the Davit arm link between the eyelets of the IN-2324 portable guardrail.

07



The A2108-18 or A2108-20 can be installed on the IN-2324 portable guardrail to improve its stability. Please refer to the section "4.3 Installation of anti-tilt device (A2108-18 or A2108-20)" on page 20 for instructions on when and how to install this system.

08

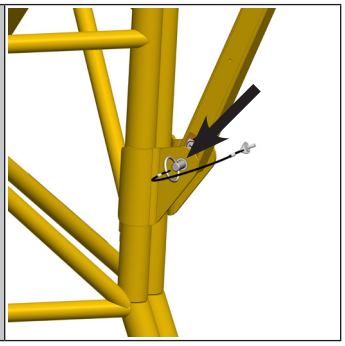

Insert the locking pin to secure the system.

09

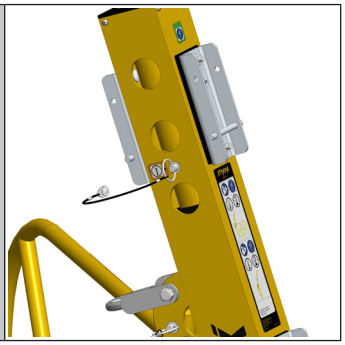

The reach of the Davit arm can be adjusted by first removing the locking pin from its location in the center of the Davit arm.

10

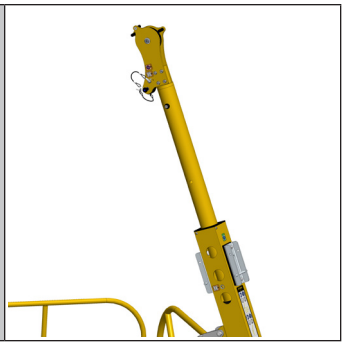

Extend the Davit arm according to your needs (adjustable from 12” [305 mm] to 18” [457 mm]).

11

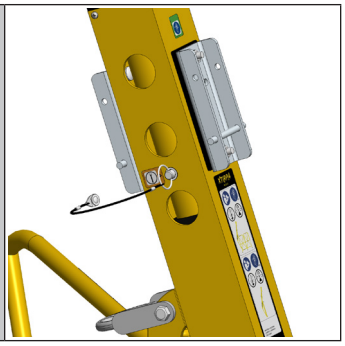

Insert the locking pin to secure the Davit arm in position.

4.3 Installation of anti-tilt device (A2108-18 or A2108-20)

01



An anti-tilt device (A2108-18 or A2108-20) can be installed on the IN-2324 portable guardrail to improve its stability.

02

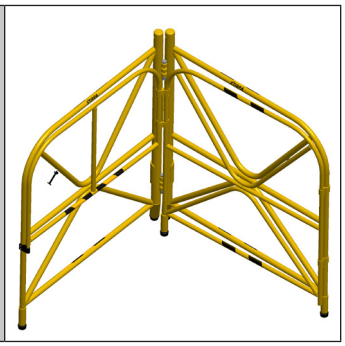

If the IN-2324 portable guardrail is configured in the V position, an anti-tilt device (A2108-18 or A2108-20) must be installed to ensure adequate stability.

03

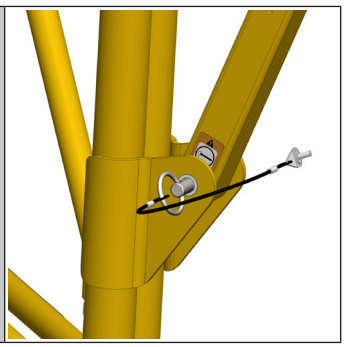

To install the anti-tilt device, start by removing the pin from the Davit arm link.

04

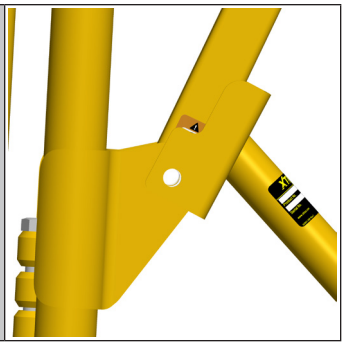

Position the anti-tilt device so that its mounting holes line up with the eyelets.

05

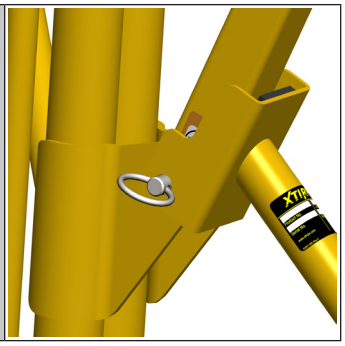

Secure the system by reinserting and locking the pin.

06

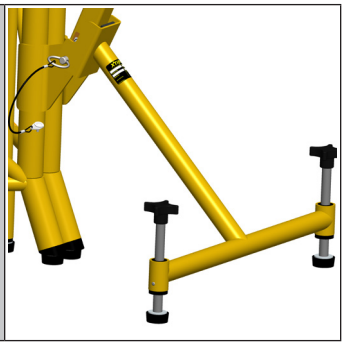

Adjust the rubber feet of the anti-tilt device by turning the knobs until the system is stable and firmly supported.

07



The A2108-20 model is equipped with wheels, which improves the portability of the system.

08



To move the system, adjust the legs to tilt it onto the wheels.

09

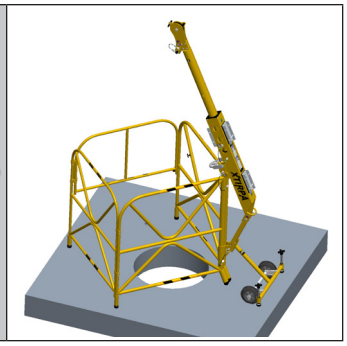

Move the system to the desired location and place it upright on its feet.

10

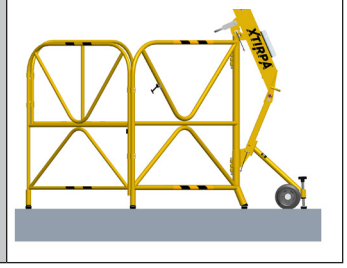

Adjust all feet to stabilize the system.

4.4 The installation of a self-retracting device will be done on anchorage points.

01



The IN-2210 Davit arm of the IN-8002 system is equipped with two (2) mounting plates (A2002-22/G/N) on the top, which serve as anchor points. Please consult section "5.1 Anchor points" on page 25 for more information. These anchor points (N° 1 et 2) allow for the installation of a self-retracting device and its respective lifeline.

02

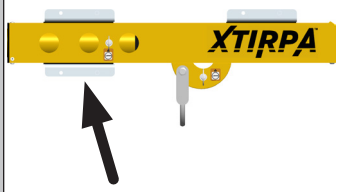

The IN-2210 Davit arm of the IN-8002 system is also equipped with one (1) mounting plate (A2002-22/G/N) on the underside, which does not serve as an anchor point for fall protection. This anchor point (No 4) is intended solely for the installation of a lifting device and cannot be used to install a self-retracting device and its respective lifeline.

03

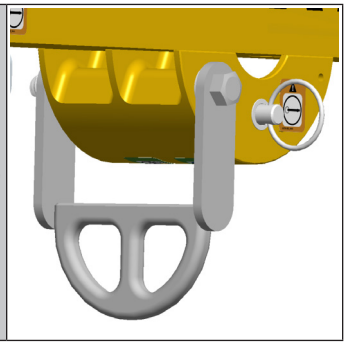

The IN-8002 system's Davit arm is equipped with an anchor point designed to facilitate the connection of a carabiner and can also serve as an anchor point. This anchor point has a higher minimum breaking strength (MBS); please refer to section 1.3 for more details.

04

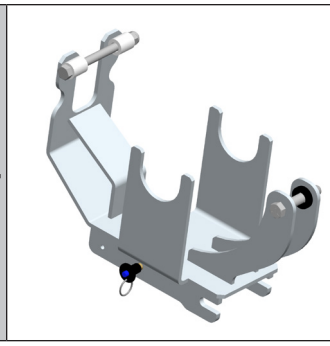

The installation of a self-retracting device begins with the installation of the corresponding mounting bracket. The appropriate mounting bracket for your device can be obtained from the manufacturer.

05

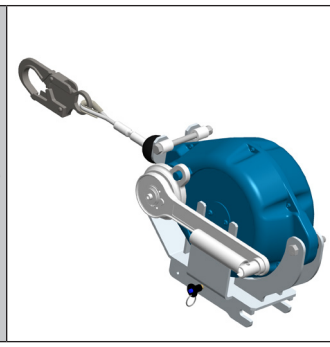

Install the self-retracting device or lifting device on the mounting bracket and secure it by locking it in place.

06



Select the mounting plate position (A2002-22/G/N) that best suits your application – either anchor position 1 or 2 – and then install the mounting bracket.

07

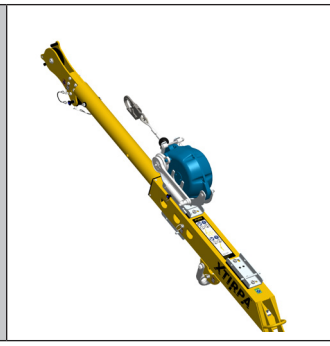

Once the device is correctly installed on the mounting bracket, position the assembly on the Davit arm.

08

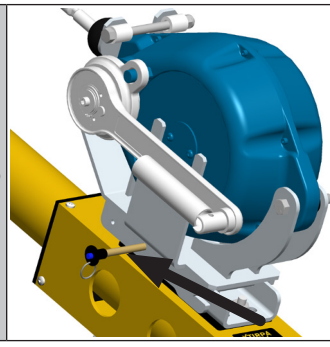

Insert the locking pin to secure the self-retracting device.

09

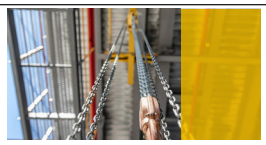

MAINTENANCE MANUAL
XTIRPA™ WINCH

Prepared for
the XTIRPA™ Service Centers

XTIRPA

Please refer to the manual for the self-retracting device or lifting device for instructions on how to use it.

10

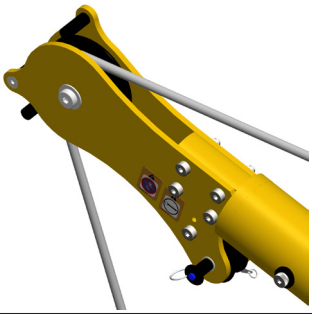

Unroll the required length of lifeline to position it between the pulleys on the Davit arm.

11

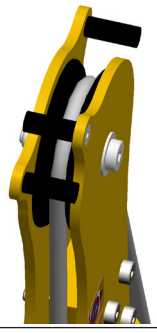

Position the lifeline on the pulley by passing it through the pins. The pins are designed to guide the lifeline safely and prevent it from coming off the pulley during use or in the event of a fall arrest.

5. OPERATION

⚠ WARNING

Section "3. REQUIREMENTS IN TERMS OF SAFETY" on page 10 must be read and followed closely. Failure to follow these instructions could result in injury or death.

⚠ WARNING

Make sure you avoid any fall or impact coming from objects in the trajectory of the fall or in its vicinity. Always remove any obstacles below the working area to ensure a clear fall path. Please make sure that the work zones are free of debris, obstructions, tripping hazards, spills, or any other risks that may hamper the safe use of the anti-fall system. DO NOT use the system before the work environment has been inspected by a qualified and competent person and they have determined that the risks identified could be eliminated and the exposure to these could be avoided.

Work directly under the anchor/anchorage connector, if possible. The free fall distance and the risk of falls increases when you are not working directly under the anchor/anchorage connector. A full body harness is the only acceptable body holding device that can be used in a fall arrest system.

⚠ WARNING

This system cannot be used under the influence of drugs or alcohol.

5.1 Anchor points

The IN-2210, part of the IN-8002 system, is equipped with three anchoring plates. Anchoring plates 1 and 2 are the only ones authorized for use as anchor points for employees, specifically designed for fall protection. The anchoring plate 4 must not be used to connect a lifeline; it is intended exclusively for attaching a lifting device for recovery purposes. In addition, the IN-2210 includes an anchor point 3, designed for use with a carabiner. The Minimum breaking strength (MBS) of each anchor point is indicated in section "1.3 Capacity, limits and design" on page 5 of this manual and must be consulted before using the system. Please refer to the illustration below for more details.

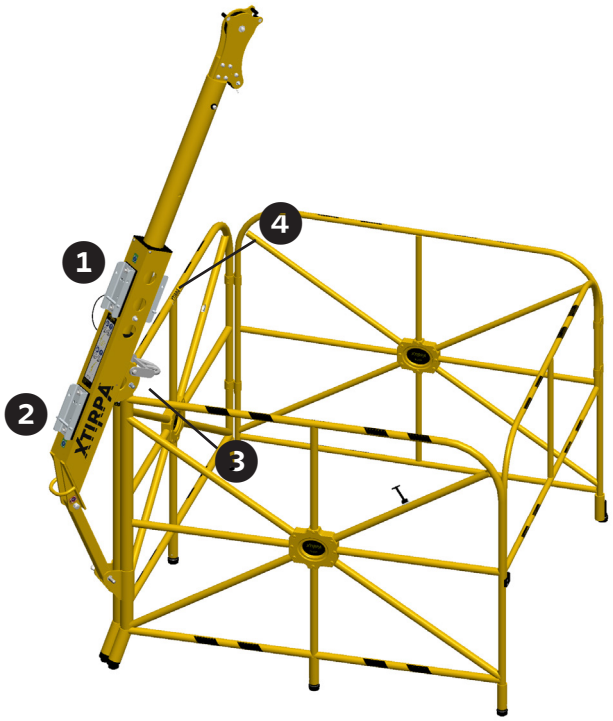

5.2 Multi-Users

The maximum number of simultaneous users can change according to the system configuration. It is essential to ensure that the system is used within its intended capacity to guarantee safety and compliance. For detailed information on the number of users allowed for each configuration, please refer to section "1.3 Capacity, limits and design" on page 5 of this manual.

5.3 Acceptable work angle

The acceptable work angle of a Fall arrest system (FAS) defines the safe working area in which the system must be used. It corresponds to the angular range, measured from the anchorage point, within which the worker can move or perform tasks while being exposed to a risk of falling. Using the system outside the acceptable work angle may compromise its operation, increase the fall distance, or even cause the system to fail. It is therefore essential to observe the specified acceptable work angle to ensure maximum safety during use. Please refer to the illustration below for more details.

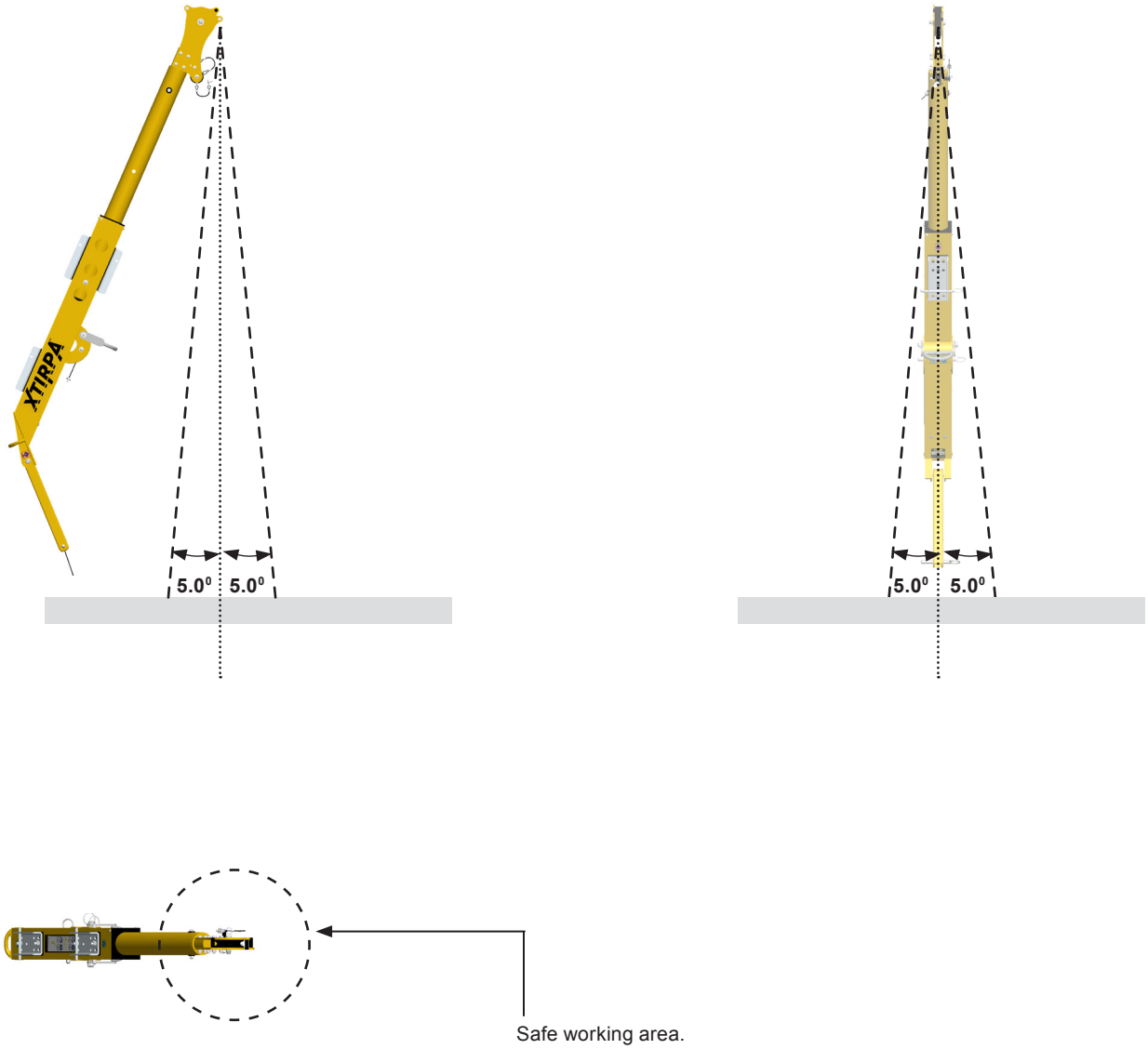

5.4 Acceptable work angle without risk of falling / recovery angle

This is the area in which the worker can move or work without being at risk of falling. For example, a worker climbs down a ladder while being protected by his fall arrest system: he is then in the acceptable work zone. Once he reaches the ground, he is no longer in a falling position. He can therefore move freely within a larger area without needing to remain secured. Please refer to the illustration below for more details.

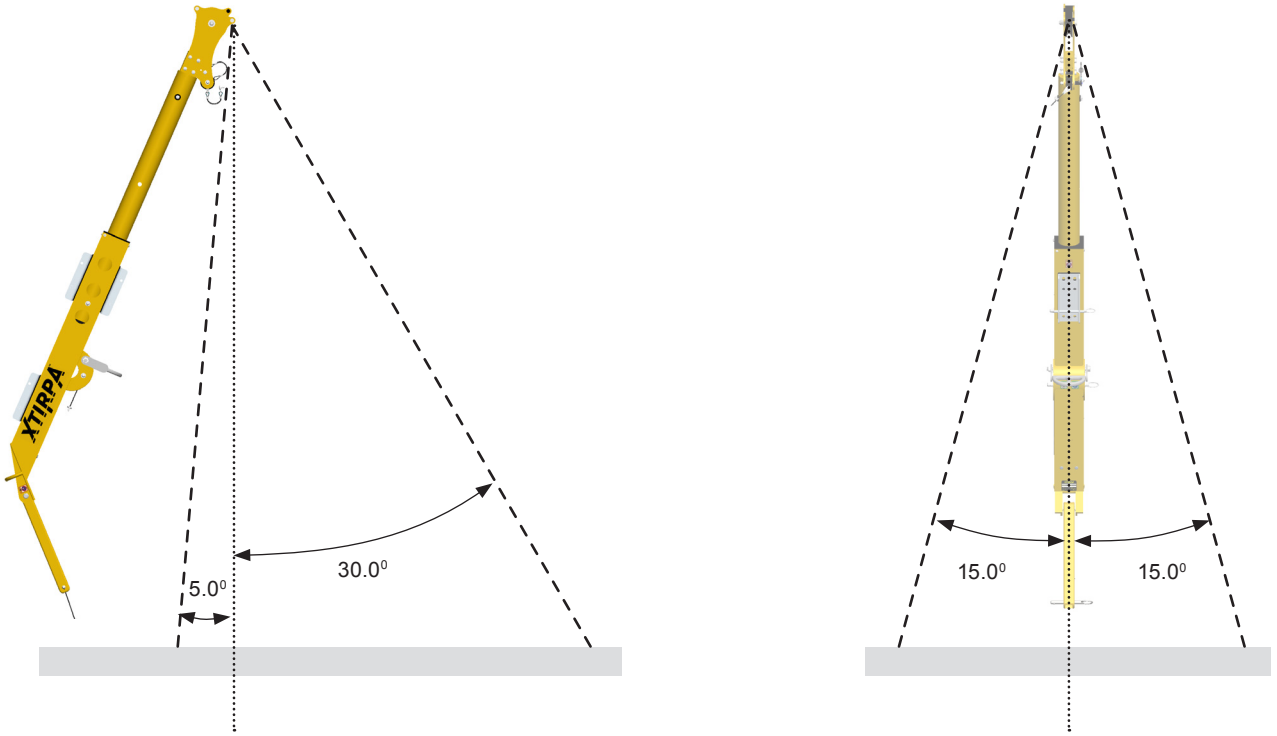

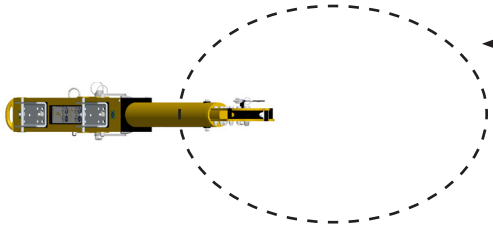

Safe working area without risk of falling / recovery angle.

6. INSPECTION, MAINTENANCE, AND STORAGE

All the systems have been designed to operate for at least 10 years provided that they have been used within the limits of their design, as well as maintained, inspected, and stored in accordance with this manual. Any system must immediately be removed from circulation if its safety is in doubt or if it was used to arrest a fall. It will then have to go through a proper inspection and maintenance, in accordance with this section.

6.1 Inspection

A visual inspection of the anchorage connector is required before using it to make sure it has no damage or defect. It is also required to carry out an annual inspection of the system by a qualified or competent person, according to the manufacturer's requirements or those of the service center. It is recommended to increase the frequency of these verifications when increasing the use of the system. These periodic verifications are necessary since user safety is directly related to regular maintenance and the repairing of system components.

Following every annual inspection, a label with the date of the last or the next annual inspection should be affixed on the equipment. If one of the damages or defects described above if observed, please contact a service center or the manufacturer to obtain help.

6.2 Maintenance

During a visual or annual inspection, the general condition of the system must be inspected, including the adapter, to establish the presence of cracks, excessive dirt, rust, warping, or excessive wear. Verify that all necessary parts and all the components, including pins and straps, are present. Please verify that all the bolts and nuts are properly tightened and all the labels can be read. Regularly clean the system components with water and a soft detergent. New labels can be obtained upon request. The results should be recorded in writing on the maintenance and inspection sheet.

Equipment maintenance can be done by a competent or qualified person, as well as a service center or the manufacturer. Equipment repair must be done exclusively by a service center or the manufacturer. Repairs will be supported for the designed life span of the system, after which they will no longer be supported.

6.3 Storage

Store the device in a dry and clean place, away from direct sunlight. The system must not come into contact with corrosive or aggressive materials, nor be exposed to extreme temperatures. It is recommended that the Anchorage connector and its components be stored and transported in special packaging that can be obtained from the manufacturer, Innova Public Utility Products, Inc., or from authorized dealers.

7. COMPONENTS

7.1 Temporary anchoring systems

8011-01



A2108-18
Option



Or option
A2108-20

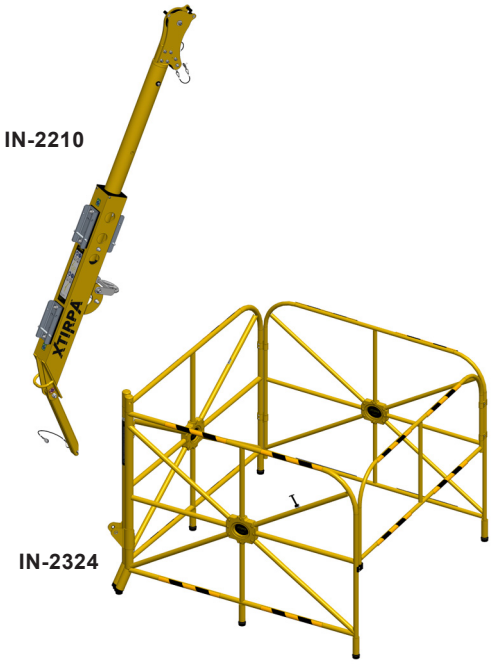

8011-02



A2108-18
Mandatory



Or option
A2108-20
Mandatory



8. APPENDIX

8.1 Labels









SERIAL NUMBER LABEL

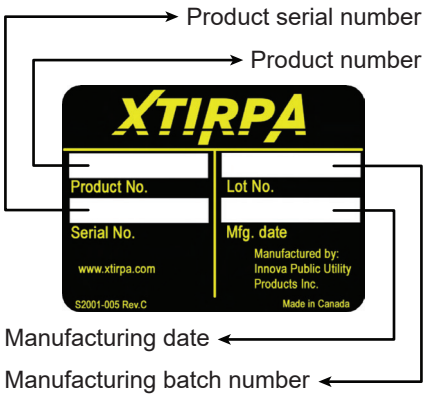

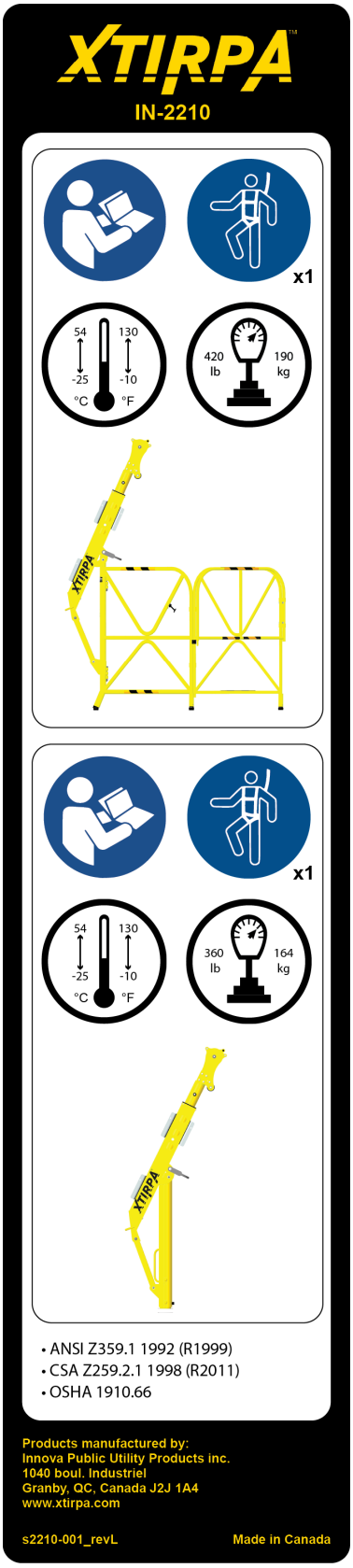

8.2 Calculation for ground clearance

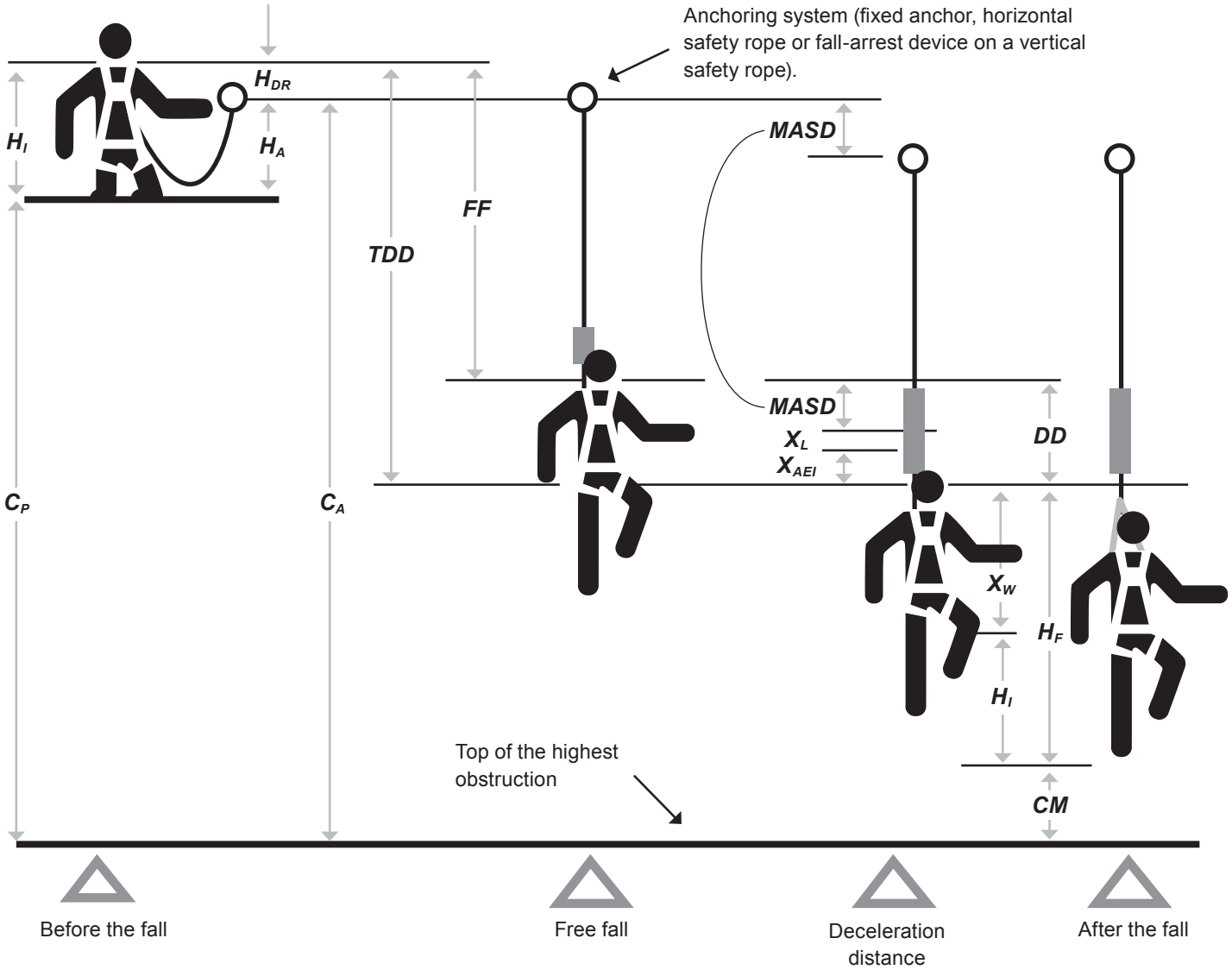

C_A	Clearance required below anchor. $FF - H_{DR} + DD + H_F + CM$
FF	Free fall.
Cp	Clearance required below platform. $FF + DD + X_W + CM$ $C_A - H_A$
DD	Deceleration distance $MASD + X_L + X_{AEI}$
$MASD$	Maximum anchor system deflection (dynamic deflection of horizontal belay ropes, flexible anchors, vertical belay ropes, etc.).
TDD	Total drop distance (from the worker's dorsal D-ring). $FF + DD$
CM	Clearance margin.
H_A	Height of anchor above work platform.
X_{AEI}	Deployment of individual energy absorber or self-retracting safety cord with clutch.
H_{DR}	D-ring height above anchor$_{da}$ is negative if initially the D-ring is below the anchor).
H_F	Final height of the D-ring (above the worker's toes) when the fall is arrested.
H_I	Initial height of the D-ring (above the working surface) at the start of the drop.
X_L	Stretching of the safety cord.
Xw	Length after stretching (due to inversion and slippage of the D-ring, the entire harness and the elongation of the worker's body).

XTIRPA™

MAINTENANCE AND INSPECTION LOG

Innova
Produits de Services Publics - Public Utility Products inc.

Product: _____ Purchasing date: _____

Model number: _____ Serial number: _____ Manufacturing date: _____

Date of next inspection: _____ Date of 1st use: _____

INSPECTION DATE	LABELS	CORROSION	STRUCTURAL DAMAGE	WELDING	PINS & HARDWARE	OTHER (SPECIFY)	CORRECTIVE ACTION TAKEN (if required)	INSPECTED BY:
	☐	☐	☐	☐	☐			
	☐	☐	☐	☐	☐			
	☐	☐	☐	☐	☐			
	☐	☐	☐	☐	☐			
	☐	☐	☐	☐	☐			
	☐	☐	☐	☐	☐			
	☐	☐	☐	☐	☐			
	☐	☐	☐	☐	☐			
	☐	☐	☐	☐	☐			
	☐	☐	☐	☐	☐			
	☐	☐	☐	☐	☐			

COMMENTS: _____

_____

*Any failure to follow the Manufacturer's instructions contained in the Instruction and safety manual, including with regard to the inspection and maintenance of the XTIRPA system and of components and parts there of, will cause warranty to become null and void and may result in serious injury or death of the user, for which the Manufacturer disclaims all warranties and liabilities whatsoever, user, owner and purchaser of the XTIRPA system waiving all claims, rights and recourses against Manufacturer and derived there from.

Manufactured by: INNOVA Public Utility Products Inc. 1040 boul. Industriel, Granby, Quebec, Canada J2J 1A4 Tel: (450) 777-1240 Fax: (450) 372-9936

REGISTRATION LIMITED WARRANTY FORM

This warranty applies only to the original purchaser and is the only one applicable to the Xtirpa System, and is in lieu of all other warranties, expressed or implied. The purchaser has to complete and return to INNOVA Public Utility Products Inc., all information within thirty days of purchase. Otherwise limited warranty will be void, if the product is not registered.

Register now : Mail or fax this registration form or visit our web site and register online.
Mail : Produits services publics Innova Inc., 1040, Boul. Industriel, Granby J2J 1A4
Fax. : (450) 372-9936
Web site : www.xtirpa.com

XTIRPA PRODUCT

Product : _____ Purchasing date :_____

Model number : _____ Manufacturing date : _____

Serial number : _____ Supplier : _____

CUSTOMER / USER INFORMATION

Company : _____ Phone : _____

Street address : _____ Fax. : _____

City : _____ State : _____ E-Mail : _____

Zip : _____

Name :_____ Do you wish to be on Innova's mailing for new product literature: :

Position : _____ YES ☐ NO ☐

*Anyf ailureto followth eM anufacturei~nss tructioncso ntaineidn thel nstructioann ds afetym anuali,n cludinwg ithr egardto thei nspectioann dm aintenancoef t heX TIRPAs ystema ndo f componenatsn dp artst hereo f,w illc ausew arranttyo becomen ulla ndv oida nd mayr esultin seriousin juryo r deatho f theu ser,f or whicht he Manufacturdeirs claimasl l warrantieasn dl iabilitiews hatsoeveur,s er,o wnera ndp urchaseorf theX TIRPAs ystemw aivinga ll claimsr,i ghtsa ndr ecourseasg ainsMt anufacturaenr dd erivedth eref rom.

Manufactured by: INNOVA Public Utility Products Inc. 1040 boul. Industriel, Granby, Quebec, Canada J2J 1A4 **Tel: (450) 777-1240 Fax: (450) 372-9936**

NOTES

XTIRPA™

SAFETY SOLUTIONS FOR CONFINED AREAS

Head office and manufacturing plant
Innova Public Utility Products Inc.
1040, Boulevard Industriel
Granby, Qc, Canada
J2J 1A4

Phone: 450.777.1240
Toll-free calls: 1.800.461.1937

www.xtirpa.com

XTIRPA is a registered trademark of
Innova Public Utility Products Inc.
used under license in Canada

MU8011-(en-us)_rev05.02
Printed in Canada
December 2025